BULLARD OUTDOOR
BUILT for the STORM

RONI
Inground Luminaire - Compact/Mini

BULLARD OUTDOOR
BUILT for the STORM

CODE: BO-RN-KPG-IL

FIXTURE TYPE: _____

PROJECT NAME: _____

GENERAL INFORMATION:

Roni is a dynamic LED inground light, with energy-efficient operation and impressive luminance. Roni enhances outdoor spaces effortlessly, supports dimming options and allows you to create the perfect ambiance with ease. Experience superior lighting versatility with Roni.

FIXTURE TYPE:

Inground Luminaires - Compact/Mini

LIGHTING:

LED

VOLTAGE:

110-277V

MATERIAL:

Aluminium anodized finishing or powder painting

CRI:

80

IP RATING:

IP 67

IK RATING:

IK 06

sales@gordonbullard.com
www.bullardoutdoor.com
1-877-964-4646

991 South Gull Lake Dr
Richland, MI 49083
USA

Due to the dynamic nature of lighting products and the associated technologies, luminaire data on all specification sheets is subject to change at the discretion of Gordon Bullard LLC and associated companies.

© Bullard & Company 2026 All Rights Reserved

Updated 02/04/2026

BULLARD OUTDOOR
BUILT for the STORM

CODE: BO-RN-KPG-IL

FIXTURE TYPE: _____

PROJECT NAME: _____

NOTES:

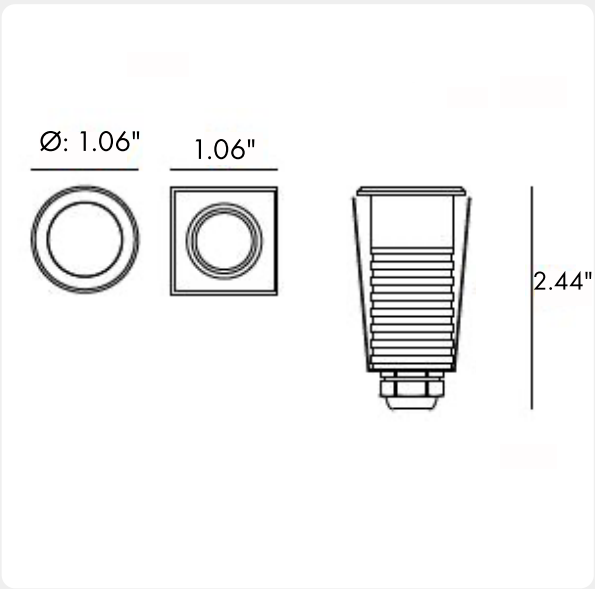

LED | 110-277V | IP67 | DALI

HOW TO ORDER:	CODE:
Example: CODE: BO-RN-KPG-IL-XXX-XXX-XXX-XXX-XXX-XXX	BO-RN-KPG-IL-D2BPR0134-K30-DIM-

1 MODELS:

CODE -D2BPR0134

DIMENSIONS:

Diameter - Ø: 1.06" (2.7 cm)

Height - H: 2.44" (6.2 cm)

LIGHT SOURCE:

LED / 1 x 0.5W / 26 mA / 23 lm / IK 06 / 110-277V

CODE -D2BPS0134

DIMENSIONS:

Height - H: 1.06" (2.7 cm)

Width - W: 1.06" (2.7 cm)

Length - L: 2.44" (6.2 cm)

LIGHT SOURCE:

LED / 1 x 0.5W / 26 mA / 23 lm / IK 06 / 110-277V

2 CCT OPTIONS:

-K30 3000K

-CUS Custom on request*

3 DIMMING OPTIONS:

-DIM 1-10V

-PWM Pulse Width Modulation

-DALI DALI (Digital Addressable Lighting Interface)

4 WATER PROOF SOLUTION: (optional)

-B

sales@gordonbullard.com
www.bullardoutdoor.com
1-877-964-4646

991 South Gull Lake Dr
Richland, MI 49083
USA

Due to the dynamic nature of lighting products and the associated technologies, luminaire data on all specification sheets is subject to change at the discretion of Gordon Bullard LLC and associated companies.

© Bullard & Company 2026 All Rights Reserved

Updated 02/04/2026

BULLARD OUTDOOR
BUILT for the STORM

CODE: BO-RN-KPG-IL

FIXTURE TYPE: _____

PROJECT NAME: _____

NOTES:

LED | 110-277V | IP67 | DALI

HOW TO ORDER:	CODE:
Example: CODE: BO-RN-KPG-IL-XXX-XXX-XXX-XXX-XXX-XXX	BO-RN-KPG-IL-D2BPR0134-K30-DIM-

5 ACCESSORIES:

SLEEVE (OPTION 1)

-114#

SLEEVE (OPTION 2)

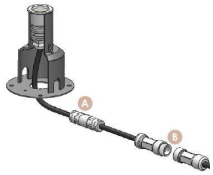

-180#

6 PHOTOMETRIC INFO:

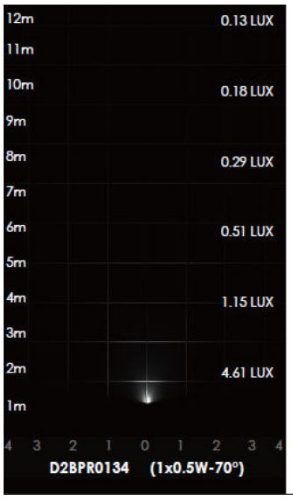

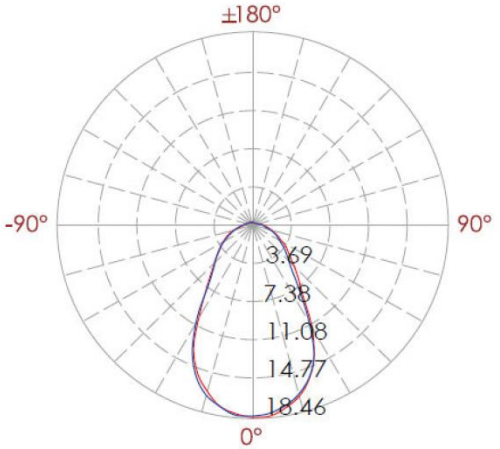

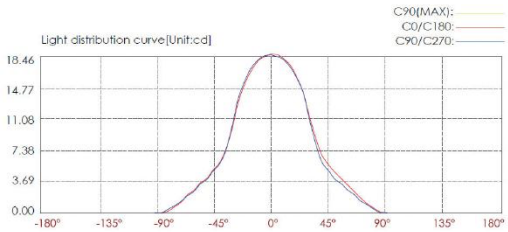

Lux distance curve

Illuminance at a distance		Beam width V	Beam width H
Center beam LUX			
2m	4.61 LUX	2.6m	2.5m
4m	1.15 LUX	5.1m	5.1m
6m	0.51 LUX	7.7m	7.6m
8m	0.29 LUX	10.2m	10.1m
10m	0.18 LUX	12.8m	12.7m
12m	0.13 LUX	15.3m	15.2m

Ver.Spread:65.2 Horiz.Spread:64.8

sales@gordonbullard.com
www.bullardoutdoor.com
1-877-964-4646

991 South Gull Lake Dr
Richland, MI 49083
USA

Due to the dynamic nature of lighting products and the associated technologies, luminaire data on all specification sheets is subject to change at the discretion of Gordon Bullard LLC and associated companies.

© Bullard & Company 2026 All Rights Reserved

Updated 02/04/2026